IWSH Leads Handwashing Efforts for Navajo Nation COVID-19 Relief

NATIONWIDE WASH STATION CHALLENGE SET FOR SPRING, WHILE REMOTE PROTOTYPING PROJECT HEATS UP IN WISCONSIN, PRODUCT PILOT LAUNCHES ON RESERVATION

Story by Mike Flenniken

The COVID-19 pandemic has hit the Navajo Nation especially hard — more than 13,000 residents have now contracted the virus — and the ability to wash one's hands has never been more important.

The International Water, Sanitation and Hygiene Foundation (IWSH) is leading a project to deliver mobile wash stations to the Navajo Nation reservation, where more than 30% of residents — an estimated 52,000 people — live without access to running water.

Two prototype units were recently unveiled at the Milwaukee School of Engineering (MSOE), where students Kathryn Ashley and Sarah Ceurvorst — both members of the American Society of Plumbing Engineers — are leading a range of testing and troubleshooting activities involving the school community and general public through the winter months. People using the stations are encouraged to complete a survey that may be accessed by scanning an accompanying QR code.

IWSH and DigDeep — a grassroots nonprofit working to expand running water on the Navajo Nation through its indigenous-led Navajo Water Project — collaborated to design the prototypes. Volunteers at UA Local 400 in Kaukauna, Wisconsin, assembled the stations, one of which uses a 120-volt trough-type heater that sits inside a 210-gallon water tank. The components are inside a highly insulated enclosure.

The other unit is designed to be used where line voltage is not available, which means there is no electricity. It incorporates a solar panel, a 12-volt circulating pump and a timer. The pump is set on a timer in order to circulate the water to keep it from freezing, much as a flowing river doesn't freeze during the winter when temperatures reach freezing.

The water in the units is intended for hand washing only and is not considered potable.

The designs will be revised to incorporate findings from the on-campus testing, and the technical drawings and bill of materials will be finalized. IWSH will then lead a Wash Station Challenge in the spring, during which volunteers at UA Locals throughout the United States will be invited to assemble 10 to 12 wash stations ready for delivery to the Navajo Nation in summer 2021.

CONTACT INFO:
IWSH FOUNDATION
101 Constitution Ave.
Washington, D.C. 20001
USA

Ph: +1 844 497 4674
Web: www.iapmo.org/iwsh

Seán Kearney,
Managing Director
Ph: +353 872 150 561

Email:
sean.kearney@iwsh.org

Top: Katie Ashley, left, and Sarah Ceurvorst, right, have led testing of the prototype Wash Stations at the MSOE campus during the winter term.

Center: Katie Ashley has previously traveled to Nicaragua and Panama to help build fresh-water systems in rural communities.

Bottom: Sarah Ceurvorst will oversee further analysis of cost, assembly and transportation of the wash stations, plus preparation of a manual and final bill of materials during the spring term.

PHOTOS COURTESY OF MSOE

"UA 400 is excited to be a part of this critical project," UA Local 400 Business Manager Trevor Martin said. "UA 400's members are proud to volunteer their skills and knowledge to such a worthy effort! IWSH and DigDeep continue to do great work throughout the United States and the world, providing safe water and hygiene solutions to the most remote corners of the globe."

Doug Nelson, an associate professor in the Civil and Architectural Engineering Department, and Natalie Villegas, a project coordinator in MSOE's Community-focused Real-world Engagement in Academics Through Experiential-learning (CREATE) Institute, are overseeing the testing at the school.

Established in 2019, the CREATE Institute ensures MSOE students receive well-rounded, high-impact educational experiences that will enhance the relevancy of their learning. The institute works with faculty, staff and students as a campus resource for industry engagement and academic excellence.

"MSOE has a long history of solving practical engineering problems using applied projects in communities," Nelson said. "CREATE was founded on this tradition and we are especially pleased to have the Navajo Nation be one of those communities."

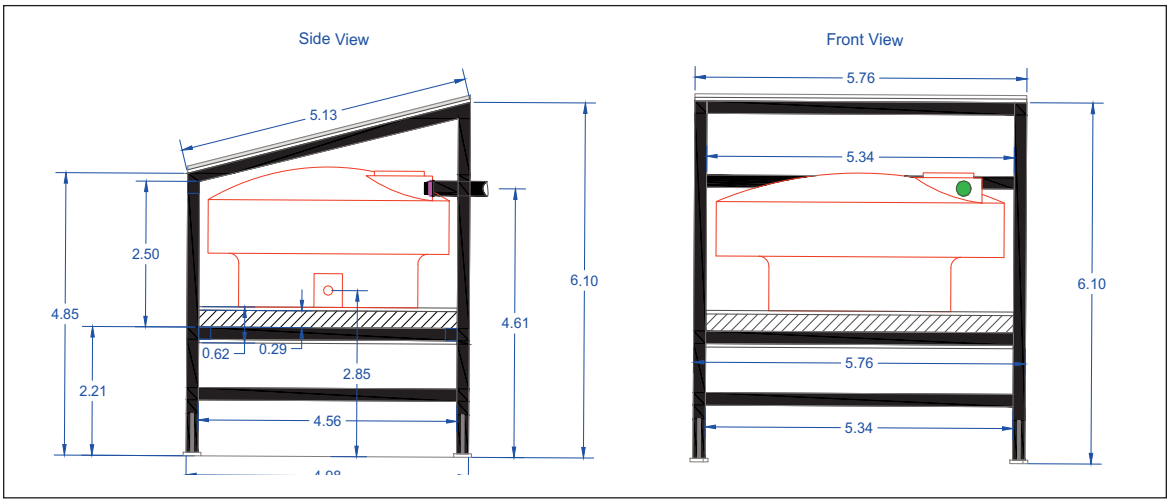

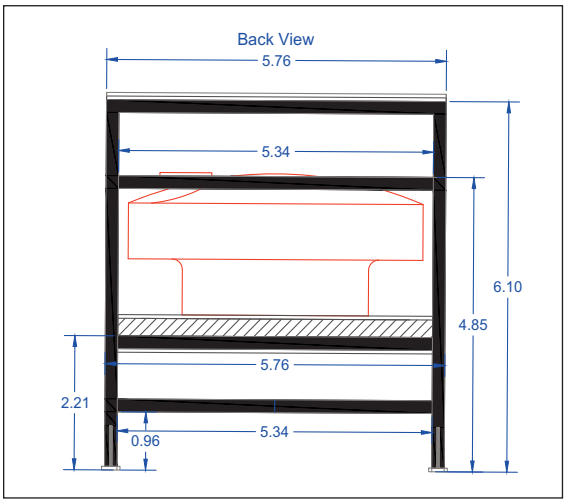

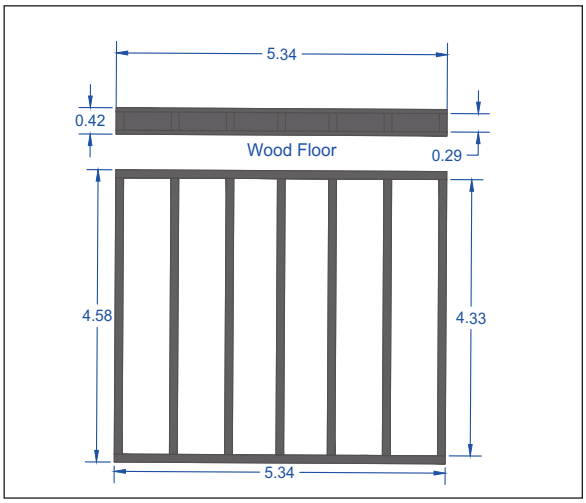

Samples of the original IWSH design drawings for these prototype wash stations, subsequently built in collaboration with UA Local 400 in Kaukauna, Wisconsin. On receiving the prototypes, MSOE students have gone on to improve the structural design and reduce weight and overall construction costs.

GRAPHICS COURTESY OF IWSH

Ceurvorst and Ashley, architectural engineering students in Nelson's advanced plumbing course, are using the wash stations as the basis for their term projects.

Ceurvorst said Nelson, who is her adviser and mentor, learned of the project and pitched it to her because she had been asking him about opportunities for her to use her skills and knowledge to help people.

"I would have done it regardless, but it just worked out that I could get really in depth on a class basis with the project and give a lot of time to it because of that," she said. "He talked to the class about it to see if anyone else wanted to do it as their term project as well, and Katie joined in and the rest is history. We're fully, deeply involved now, and we love it."

Ashley said since the wash stations were set up near the Campus Center in late October, they have been monitoring four data collectors on each station that record external and internal temperature, as well as that of the water itself.

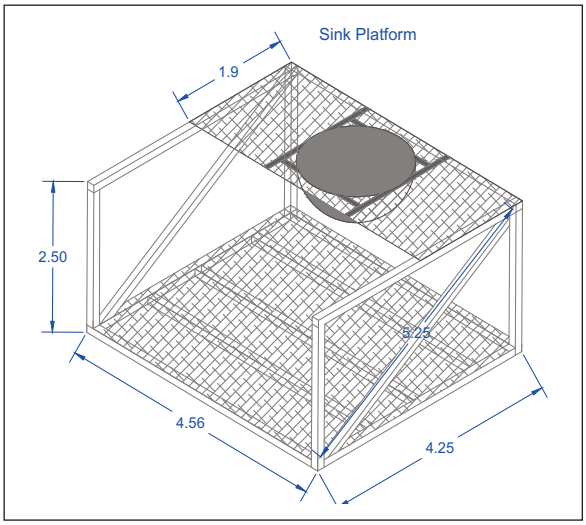

"Here in Wisconsin, we definitely get below-zero temperatures, so if it can withstand these temperatures here, it can definitely withstand the ones in Arizona and on the reservation. So our data that we're collecting is a comparison seeing what kind of temperatures the unit will be exposed to during these winter months and seeing if our design will ultimately combat

At MSOE, the prototype wash station design is being improved to create a more efficient and effective unit, intended for further production and deployment to the Navajo Nation reservation through an upcoming wash station Challenge event.

PHOTOS COURTESY OF MSOE

those temperatures and be able to withstand the winter."

Ceurvorst said in addition to concerns about the wash stations freezing during the winter, they are looking for ways to make them less bulky and more portable. She said the original structural members were too large, so she was able to figure out a more efficient pipe size.

"There are steel square tube members that are welded together for the structure of the thing," she said, "so I figured out the proper sizing for that so that it would still support the weight of the water when it was full in the tank. That reduced the weight about 200 pounds."

Ceurvorst said in terms of functionality, they would like to add a view window so it would be possible to see how much water is in the tank, as well as removable lids to make it easier to clean the tank. They also are working on a plan for what to do with the greywater that results from people washing their hands. For the prototypes on the MSOE campus, that water is being diverted to a nearby plant bed.

This is not the first time Ashley and Ceurvorst have used their knowledge and skills to benefit others.

Ashley has participated in Water Brigades, which is part of MSOE's Global Brigades program, since she was a freshman, and traveled to Nicaragua and Panama to help build fresh-water systems in rural communities.

"It was an amazing experience seeing the actual impact that we had and got to learn some things from it," she said, "and bringing that to the United States is great."

Ceurvorst was in Engineers without Borders and helped design a schoolhouse that was part of a project built in Jayobaj, Guatemala. She's also been involved in the Servant-Leadership program at MSOE, of which Nelson is the chair, since her freshman year.

"It really opened my eyes to what I want to spend my time and spend my life doing, and to serve others with the gifts and the knowledge that I have in my free time whenever I can; it really makes everything else worth it."

Randy Lorge, director of Workforce Training and Development for IAPMO and a UA Local 400 member, is leading the overall project from the IWSH standpoint. Lorge was an instructor of the plumbing apprenticeship program at Fox Valley Technical College in Appleton, Wisconsin, when he and Nelson served as coaches for Team USA in the 2015 Community Plumbing Challenge (CPC) in Nashik, India, and the 2016 CPC in Diepsloot, South Africa.

Left: UA Local 400 Members (left to right) Trevor Martin, Matt Stoop, Randy Lorge (IAPMO/IWSH), Jeremy Meyers and Doug Dokey.

Below: UA Local 400 Welding Instructor Jeremy Meyers at work on prototype wash station construction.

PHOTOS COURTESY OF UA LOCAL 400

"It was a natural fit to call on Doug Nelson and his MSOE students to take these wash station designs to the next level," Lorge said. "Doug immediately connected our IWSH team with Sarah and Katie, who are two outstanding engineering students. We had some great back-and-forth technical discussions with them. Those discussions included a Q&A session with the DigDeep team, which were also very positive."

"I am also very proud of the support IWSH received from UA Local 400 on this project," Lorge added. "For each of the Community Plumbing Challenges over the past five years, they have literally shown the world that their members are ready and willing to help whenever and wherever they are needed. The skills and craftsmanship they bring to help the CPCs are second to none and the prototypes reflect it. We will be excited to reconnect with them — and hopefully, several other UA Locals around the country — for the next phase of this initiative: a nationwide Wash Station Challenge manufacturing project which we are planning to launch early next year."

The upcoming Wash Station Challenge will focus on the skills education and training development of UA members around the country. Jeremy Meyers, a journeyman who is a welding instructor at UA Local 400, took charge of fabricating the first prototypes in Wisconsin this fall, making him one of the first volunteers to participate in the project. "Being able to help people in need through Local 400 was truly a great experience; I was happy to help in any way I could," Meyers said. "It was fun working with other local members and watch it all come together."

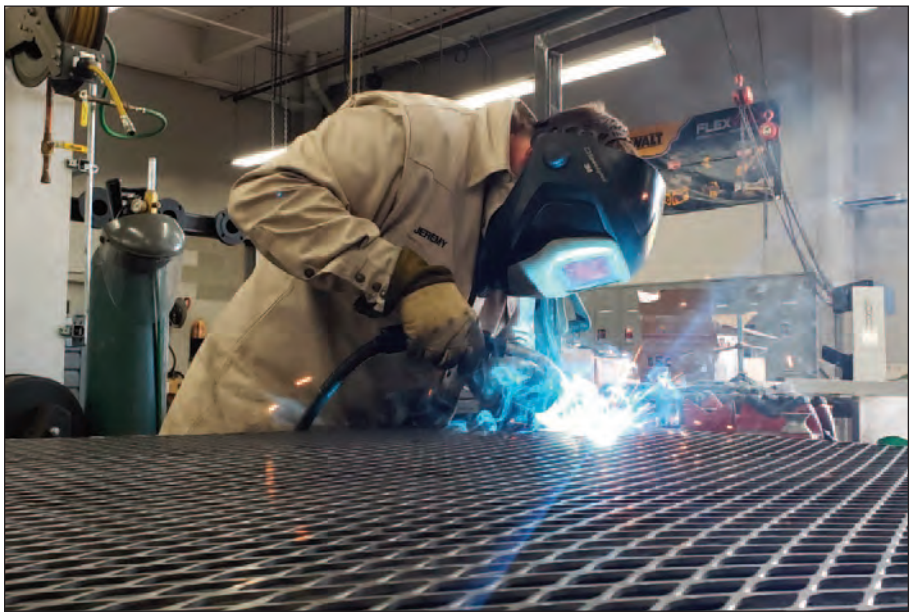

IWSH will share updates from the ongoing Wash Station Prototype project at MSOE through the winter, and more information about the upcoming Wash Station Challenge will be announced via the IWSH website and social media in the new year.

IAPMO COVID-19 RESOURCES

Please visit IAPMO's coronavirus webpage for this and other related information.

https://www.iapmo.org/ibu/whats-new/coronavirus-resources

RELATED STORY

Exclusive IWSH, LIXIL, DigDeep and Navajo United Way Partnership Delivers Innovative Handwashing Taps

Story by Jed Scheuermann

The connection between handwashing and reducing risk of COVID-19 exposure is well documented. Sounds easy enough, right? Question: How does one wash their hands when lacking even basic access to safe water and simple plumbing fixtures such as a wash basin?

A bold, collaborative partnership has emerged to address this need on the Navajo reservation. LIXIL, through its SATO Division, recently introduced a simple device known as a SATO Tap. Essentially a water-filled two-liter soda bottle rests on a plastic water dispensing tap designed for handwashing. LIXIL, utilizing 3-D printers, manufactured and donated 100 units for immediate deployment to remote Navajo people.

The LIXIL SATO Tap was recently included in *TIME Magazine*'s Best Inventions of 2020: "100 innovations changing how we live". This list, compiled each year by nominations from *TIME* editors and correspondents around the world, highlights inventions that are making the world "better, smarter and even a bit more fun... evaluated on key factors including originality, creativity, effectiveness, ambition and impact." "We are proud to partner with the IWSH

Foundation, DigDeep and Navajo United Way to help the community access safe, clean water for handwashing to fight the COVID pandemic," said Troy Benavidez, vice president of Corporate Affairs and head of Global Government Relations and Policy for LIXIL. "We know handwashing is critical at this time, so we expedited development of the SATO Tap for communities most in need. We will continue to do what we can to support the community during this difficult time."

IWSH partners DigDeep and Navajo United Way have been distributing this pilot batch of SATO Taps to households that do not have indoor plumbing facilities. DigDeep staff also have one unit in each of their vehicles for personal use while delivering SATO Taps. The reaction has understandably been entirely positive.

"They are bomb!" said Emma Robbins of DigDeep's Navajo Water Project. "They mean the world to us and we are so appreciative of IWSH and LIXIL."

Because the SATO Tap is so light and portable, it is an ideal solution for DigDeep and Navajo United Way for their own use while out distributing them in the community.

"Field work has been busy lately," said DigDeep's Shanna Yazzie. "Out in Dilkon, we use the SATO Tap all the time. I see my technicians use it all the time."

Each SATO Tap is delivered with detailed assembly and use instructions, as well as an initial reaction survey. A supply of hand soap also accompanies these taps. A follow-up survey is provided after a week to 10 days' use of the tap to gauge user response.

While most Americans take the act of handwashing for granted, this is not the case on the reservation. Expressed feelings of genuine gratitude permeate every distribution to a home or every survey completed. Having a SATO tap fills a glaring, vital need on the reservation – the ability to wash one's hands simply and accessibly.

Learn more about the LIXIL SATO Tap, here: https://www.sato.lixil.com/satotap/

Discover *TIME Magazine*'s Best Inventions of 2020, here: https://time.com/collection/best-inventions-2020/

Tanner C. Yazzie uses a SATO Tap for handwashing. – PHOTO COURTESY OF SHANNA YAZZIE (DIGDEEP)

DigDeep Field Engineer Kaitlin Harris now always has a SATO Tap on board when in the field! – PHOTO COURTESY OF KAITLIN HARRIS (DIGDEEP)