IAPMO IGC 360-~~2020a~~2022

PUBLIC REVIEW DRAFT

Industry Standard for

Compression Fittings for Water Supply and Gas Piping Applications

IAPMO Standard

Approval of an IAPMO Industry Standard requires verification by the Standards Review Committee that the standard has been developed in accordance with the policies and procedures for standards development (S-001, *Standards Development Process*, S-008, *Appeals* and S-011, *Operation of the IAPMO Standards Review Committee*). Although IAPMO administers the process and establishes rules to promote fairness in achieving consensus, it does not independently test, evaluate, or verify the content of standards.

Consensus is established when substantial agreement has been reached by directly and materially affected interests. Substantial agreement means much more than a simple majority, but not necessarily unanimity. Consensus requires that all views and objections be considered, and that a concerted effort be made toward their resolution.

The use of IAPMO Industry Standards is completely voluntary; their existence does not in any respect preclude anyone, whether they have approved the standards or not, from manufacturing, marketing, purchasing, or using products, processes, or procedures not conforming to the standards.

The Standards Review Committee has final authority on interpretation of any IAPMO Industry Standard. Moreover, no person save IAPMO designated staff shall have the right or authority to issue an interpretation of an IAPMO Industry Standard in the name of IAPMO. Requests for interpretations should be addressed to the secretariat or sponsor whose name appears on the title page of this standard.

CAUTION NOTICE: This IAPMO Industry Standard may be revised or withdrawn at any time. The policies and procedures require that action be taken periodically to reaffirm, revise, or withdraw this standard. Interested stakeholders of IAPMO Industry Standards may receive current information on all standards by signing up to receive updates and notices at the IAPMO Standards website www.IAPMOstandards.org.

Published by
International Association of Plumbing and Mechanical Officials (IAPMO)
4755 East Philadelphia Street, Ontario, California, 91761, USA
1-800-854-2766 • 1-909-472-4100

Visit the IAPMO Online Store at: www.IAPMOstore.org
Visit the IAPMO Standards website at: www.IAPMOstandards.org

Printed in the United States of America

Contents

Preface

This is the ~~fourth~~ fifth edition of IAPMO IGC 360, Compression Fittings for Water Supply and Gas Piping Applications. This Standard supersedes IAPMO IGC 360-~~2019~~2020a, Compression Fittings for Supply and Gas Piping Applications. The previous editions of this standard are: August 2019, October 2019, January 2020, March 2020.

This Standard was developed by the IAPMO Standards Review Committee (SRC) in accordance with the policies and procedures regulating IAPMO industry standards development, Policy S-001, Standards Development Process. This Standard was approved as an IAPMO Industry Standard on ~~March 09, 2020~~.

Notes:

(1) The use of the singular does not exclude the plural (and vice versa) when the sense allows.

(2) The use of IAPMO Standards is completely voluntary; their existence does not in any respect preclude anyone, whether he has approved the standards or not, from manufacturing, marketing, purchasing, or using products, processes, or procedures not conforming to the standards.

(3) This standard was developed using an open process and in accordance with IAPMO Standards Policy S-001, Standards Development Process*, which is available on the IAPMO Standards website (www.IAPMOstandards.org).*

(4) During its development, this Standard was made available for public review, thus providing an opportunity for additional input from stakeholders from industry, academia, regulatory agencies, and the public at large. Upon closing of public review, all comments received were duly considered and resolved by the IAPMO Standards Review Committee.

(5) This Standard was developed in accordance with the principles of consensus, which is defined as substantial agreement; consensus implies much more than a simple majority, but not necessarily unanimity. It is consistent with this definition that a member of the IAPMO Standards Review Committee might not be in full agreement with all sections of this Standard.

(6) Although the intended primary application of this Standard is stated in its scope, it is important to note that it remains the responsibility of the users of the Standard to judge its suitability for their particular purpose.

(7) IAPMO Standards are subject to periodic review and suggestions for their improvement will be referred to the IAPMO Standards Review Committee. To submit a proposal for change to this Standard, you may send the following information to the International Association of Plumbing and Mechanical Officials, Attention Standards Department, at standards@IAPMOstandards.org or, alternatively, at 4755 East Philadelphia Street, Ontario, California, 91761, and include "Proposal for change" in the subject line:

(a) standard designation (number);

(b) relevant section, table, or figure number, as applicable;

(c) wording of the proposed change, tracking the changes between the original and the proposed wording; and

(d) rationale for the change.

(8) Requests for interpretation should be clear and unambiguous. To submit a request for interpretation of this Standard, you may send the following information to the International Association of Plumbing and Mechanical Officials, Attention Standards Department, at standards@IAPMOstandards.org or, alternatively, at 4755 East Philadelphia Street, Ontario, California, 91761, and include "Request for interpretation" in the subject line:

(a) the edition of the standard for which the interpretation is being requested;

(b) the definition of the problem, making reference to the specific section and, when appropriate, an illustrative sketch explaining the question;

(c) an explanation of circumstances surrounding the actual field conditions; and

(d) the request for interpretation phrased in such a way that a "yes" or "no" answer will address the issue.

(9) IAPMO does not "approve", "rate", or endorse any item, construction, proprietary device, or activity.

(10) IAPMO does not take any position with respect to the validity of any patent rights asserted in connection with any items mentioned in this Standard and does not undertake to insure anyone utilizing this Standard against liability for infringement of any applicable patents, nor assumes any such liability. Users of this Standard are expressly advised that determination of the validity of any such patent rights, and the risk of infringement of such rights, are entirely their responsibility.

(11) Participation by federal or state agency representative(s) or person(s) affiliated with industry is not to be interpreted as government or industry endorsement of this Standard.

(12) Proposals for amendments to this Standard will be processed in accordance with the standards-writing procedures of IAPMO industry standards development, Policy S-001, Standards Development Process.

IAPMO Standards Review Committee

T. Collings	Building Services & Licensing - Retired Salt Lake City, Utah, USA	*Chair*
M. Durfee	Chief Building Official - Retired Saratoga Springs, Utah, USA	*Vice-Chair*
~~M. Antonacci~~	~~Plumbing and HVAC Inspector, City of Toronto~~ ~~Toronto, Ontario, CAN~~	
R. Coffman	Mechanical Inspector, City of Cedar Falls - Retired Cedar Falls, Iowa, USA	
C. Crimmins	MN State Pipe Trades - Retired Champlin, Minnesota, USA	
R. Garcia	Senior Mechanical Inspector San Diego, California, USA	
D. Gordon	Plumbing Inspector San Francisco, California, USA	
~~J. Krahenbuhl~~	~~Plumbing and Mechanical Plans Check Specialist, Clark County - Retired~~ ~~Las Vegas, Nevada, USA~~	
~~B. Olinger~~	~~William Myers & Sons Inc. - Semi-Retired~~ ~~East Hanover, New Jersey, USA~~	
S. Peters	Plumbing & Mechanical Plans Examiner Santa Monica, California, USA	
~~B. Pfieffer~~	~~Plumbing Inspector Development Services, City of Topeka - Retired~~ ~~Topeka, Kansas, USA~~	
R. Rice	Sr. Mechanical Inspector - Retired Maplewood, Minnesota, USA	
G. Snider	Plumbing Section Supervisor, City of Surrey Surrey, British Columbia, CAN	
~~K. Thompson~~	~~IAPMO~~ ~~Ontario, California, USA~~	~~*Staff Liaison*~~
G. Istefan	IAPMO Ontario, California, USA	*Staff Liaison*

S. Choe	IAPMO Ontario, California, USA	Staff Liaison
H. Aguilar	IAPMO Ontario, California, USA	*Secretary*

IAPMO IGC 360-~~2020a~~2022
Compression Fittings for Water Supply and Gas Piping Applications

1 Scope

1.1 General

1.1.1 This Standard covers compression fittings intended for water supply and exposed above ground gas distribution in residential, commercial, industry applications and specifies requirements for materials, physical characteristics, performance testing, and markings.

1.1.2 This standard applies to compression fittings which can be used with one or more the following materials:
(a) Copper tubing Type K, L and M complying with ASTM B88.
(b) Galvanized Pipe complying with ASTM A53/A53M
(c) Stainless Steel Pipe complying with ASTM A312/A312M

1.1.3 Tubes or pipes used in these fittings shall not exceed 50 DN (NPS-2) in outer diameter.

1.2 Alternative Materials

The requirements of this Standard are not intended to prevent the use of alternative materials or methods of construction provided that such alternatives meet the intent and requirements of this Standard.

1.3 Terminology

In this Standard:
(a) "Shall" is used to express a requirement, i.e., a provision that the user is obliged to satisfy to comply with the Standard
(b) "Should" is used to express a recommendation, but not a requirement
(c) "May" is used to express an option or something permissible within the scope of the Standard
(d) "Can" is used to express a possibility or a capability.

Notes accompanying sections of the Standard do not specify requirements or alternative requirements; their purpose is to separate explanatory or informative material from the text. Notes to tables and figures are considered part of the table or figure and can be written as requirements.

1.4 Units of Measurement

SI units are the primary units of record in global commerce. In this Standard, the inch/pound units are shown in parentheses. The values stated in each measurement system are equivalent in application, but each unit system is to be used independently. All references to gallons are to U.S. gallons.

2 Reference Publications

This Standard refers to the following publications, where the specified reference is made, and it shall be to the current edition of those publications, including all amendments published thereto.

ASME International (The American Society of Mechanical Engineers)
ASME B16.4
Gray Iron Threaded Fittings Classes 125 and 250

ASTM International
ASTM A53/A53M
Standard Specification for Pipe, Steel, Black and Hot-Dipped, Zinc-Coated, Welded and Seamless

ASTM A312/A312M
Standard Specification for Seamless, Welded, and Heavily Cold Worked Austenitic Stainless Steel Pipes

ASTM A536
Standard Specification for Ductile Iron Castings

ASTM B88
Standard Specification for Seamless Copper Water Tube

ASTM B783
Standard Specification for Materials for Ferrous Powder Metallurgy (PM) Structural Parts

ASTM D256
Standard Test Methods for Determining the Izod Pendulum Impact Resistance of Plastics

ASTM D412
Standard Test Methods for Vulcanized Rubber and Thermoplastic Elastomers—Tension

~~ASTM D624~~
~~Standard Test Methods for Tear Strength of Conventional Vulcanized Rubber and Thermoplastic Elastomers~~

ASTM D638
Standard Test Method for Tensile Properties of Plastics

ASTM D648

Standard Test Method for Deflection Temperature of Plastics Under Flexural Load in the Edgewise Position

ASTM D746
Standard Test Methods for Brittleness Temperature of Plastics and Elastomers by Impact

ASTM D785
Standard Test Method for Rockwell Hardness of Plastics and Electrical Insulating Materials

ASTM D790
Standard Test Methods for Flexural Properties of Unreinforced and Reinforced Plastics and Electrical Insulating Materials

ASTM D792
Standard Test Methods for Density and Specific Gravity (Relative Density) of Plastics by Displacement

ASTM D1505
Standard Test Method for Density of Plastics by the Density-Gradient Technique

ASTM D4066
Standard Classification System for Nylon Injection and Extrusion Materials (PA)

ASTM F1136
Standard Specification for Zinc/Aluminum Corrosion Protective Coatings for Fasteners

ISO (International Organization for Standardization)
ISO 868
Plastics and ebonite — Determination of indentation hardness by means of a durometer (Shore hardness)

MPIF (Metal Powder Industries Federation)
MPIF Standard 35
Materials Standards for PM Structural Parts

NSF International
NSF/ANSI 61
Drinking Water System Components - Health Effects

3 Definitions and Abbreviations

3.1 Definitions

The following definitions shall apply in this Standard:

Compression fitting — A mechanical fitting that push the pipes or tubes into the fitting by hand and lock the nut to complete tightening

Corrosion — A reaction caused by the accelerated oxidation of one metal when different metals come into contact

3.2 Abbreviations

The following abbreviations apply in this Standard:

CTS — Copper Tube Size
Note: The actual outer diameter is 3.175 mm (0.125 in) larger than nominal tube size (i.e. 0.5 CTS has an outer diameter of 0.625 in)
POM —Polyoxymethylene
WOG — Water or Gas
TPE — Thermoplastic elastomer
HDPE — High-density polyethylene

4 General Requirements

4.1 General

The compression fittings shall be designed to create a seal with the piping via a compression joining method as shown in Figure 1 as an example.

4.2 Workmanship

Compression fittings shall:
(a) be free of defects that can adversely affect their functionality or cause leaks;
(b) not restrict the flow capacity of a water or gas supply system;
(c) not obstruct flow;
(d) be sound, and free of imperfections;
(e) have uniform wall thickness;
(f) be true to pattern; and
(g) have a smooth interior waterway.

4.3 Materials

4.3.1 Body and Nut

Body and Nut covered by this Standard shall be made of ductile cast iron which complies with or exceeds grade 65-45-12 ASTM A536, or the material requirements of ASME B16.4.

~~**4.3.2 Ferrule**~~
~~Ferrule covered by this Standard shall be made of thermoplastic elastomer (TPE) which complies with the minimum properties listed in Table 1.~~

4.3.~~3~~2 Seal-Washer

Seal-Washer covered by this Standard shall be made of thermoplastic elastomer (TPE) which complies with the minimum properties listed in Table 1.

4.3.~~4~~3 Bite-Ring

Bite-Ring covered by this Standard shall be made of ferrous powder metallurgy ~~with corrosion~~

~~resistant plating~~ which complies with or exceeds material ~~designation code FN0205 in ASTM B783~~ designations FD-02XX of MPIF Standard 35.

4.3.~~5~~4 Pad

Pads covered by this Standard shall be made of 66 Nylon ~~which complies with or exceeds ASTM D4066~~(Polyamide 66) which complies with the minimum properties listed in Table 2.

~~**4.3.6 Surface coating (Body, Nut)**~~

~~Surface coating covered by this Standard shall be made of Chromium/Zinc which complies with or exceeds grade No.4 in ASTM F1136.~~

4.3.~~7~~5 Inner coating (Body)

Inner coating covered by this Standard shall be made of ~~High-density polyethylene (HDPE) which complies with the minimum properties listed in Table 2~~ thermoplastic elastomer (TPE) which complies with the minimum properties listed in Table 1.~~.~~

4.3.~~8~~6 Sleeve

Sleeves covered by this Standard shall be made of Polyacetal (POM) which complies with the minimum properties listed in Table 3.

4.4 Toxicity

Materials and components of compression fittings, intended to convey ~~or~~, dispense, and/or in contact with water for human consumption through drinking or cooking, shall comply with the applicable requirements of NSF/ANSI 61.

5 Testing Requirements

5.1 Unrestrained Hydrostatic Pressure Test

5.1.1 Test Procedure

The unrestrained hydrostatic pressure test shall be conducted as follows:

(a) Test assemblies shall include six joints of each size;
(b) A test specimen shall be fabricated containing a fitting; and
(c) The unrestrained test specimen shall be filled with water and the internal pressure increased to 4137 ± 48 kPa (600 ± 7 psi) or double the manufacturer's rated pressure, whichever is greater, at a temperature of 93 ± 3°C (200 ± 5°F) for a period of 48 h.

5.1.2 Performance Requirements

The fitting shall withstand the maximum applied pressure and temperature for 48 h without showing any loss of pressure, leakage, damage to the fitting components, or failure of the tube at the joint.

5.2 Mechanical Separation Test

5.2.1 Test Procedure

The mechanical separation test shall be conducted as follows:

(a) Test two joints of each size for each tubing type they are designed to join;
(b) Condition the assembled fittings and tubing at a temperature of 23 ± 2°C (73 ± 4°F) for at least 1 h in water or 16 h in air;
(c) After conditioning the fitting, apply the required longitudinal test load shown in Table 4 gradually over 10 s and maintain the load for a period of 1 h;
(d) After removing the test load, examine the fitting for any signs of separation;
(e) Immerse the test assembly in water at 23 ± 2°C (73 ± 4°F) and pressurize the test assembly with air or nitrogen at 138 ± 14 kPa (20 ± 2 psi);
(f) Check for any signs of leakage; and
(g) Increase the pressure to 690 ± 69 kPa (100 ± 10 psi) and again check for any signs of leakage.

5.2.2 Performance Requirements

The fitting shall show no sign of leakage or separation of the fitting from the tubing in all testing phases.

5.3 Bending Test

5.3.1 Test Procedure

The bending test shall be conducted as follows:
(a) Test two joints of each size for each tight tubing type they are designed to join;
(b) Assemble the fittings with a section of each type of tubing;
(c) The fitting shall be mounted tightly, but in a manner such that the wall of the joint is not externally supported or constrained (see Figure 2);
(d) Apply the load at the distance specified in Table 5;
(e) The total applied load in Table 5 shall be the sum of total weight of the end cap assembly and the hanging weights;
(f) The test length is measured from the joint under test to the point where the load is applied (see Figure 2); and
(g) Fill the test assembly with water, apply and maintain a hydrostatic internal pressure of 2586 ± 34 kPa (375 ± 5 psi) for 1 h at 23 ± 2°C (73 ± 4°F).

5.3.2 Performance Requirements

The fitting shall show no sign of leakage or permanent deformation.

5.4 Hydraulic Shock (Water Hammer) Test

5.4.1 Test Procedure

The hydraulic shock (water hammer) test shall be conducted as follows:
(a) Test two joints of each size for each tubing type they are designed to join;
(b) Assemble one fitting with each type of length tubing intended for use;
(c) Mount the joined fitting and tubing in a system capable of supplying a water pressure of 2586 kPa (375 psi) and set the water pressure to 103 ± 34 kPa (15 ± 5 psi);
(d) Subject the assembly to a hydraulic shock once every 2 s for 10,000 cycles with ambient water of temperature not exceeding 24°C (75°F); and
(e) The hydraulic shock shall consist of a sudden increase in pressure within 0.025 s to 2586 ± 207 kPa (375 ± 30 psi) and a return to set pressure in step (c).

5.4.2 Performance Requirements

The fitting shall show no sign of leakage, damage or separation from the tubing.

5.5 Electrical Resistance Measurement Test

5.5.1 Test Procedure

The electrical resistance measurement test shall be conducted as follows:

(a) Connect the galvanized pipe and copper pipe to a single fitting according to the assembly method suggested by the manufacturer (see Figure 3);
(b) Apply a voltage of 500 ± 10 V to the metal tube for 1 min electrification time, and measure the insulation resistance between the connected pipes using a resistance gauge; and
(c) At this time, the inside of the specimen is left blank.

5.5.2 Performance Requirements

The insulation resistance value should not be less than 1,000 MΩ regardless.

5.6 Pulling Test

5.6.1 Test Procedure

The pulling test shall be conducted as follows:

(a) Connect a galvanized pipe with a length of 300 mm (12 in) or more to the fitting;
(b) Apply air pressure of 0.6 MPa (87 psi) to the test assembly using the method shown in Figure 4;
(c) Spray the fitting assembly with leak detection liquid (i.e. soap solution); and
(d) Pull the tube away from the fitting using the minimum tensile loads specified in Table 6.

5.6.2 Performance Requirements

There shall be no leakage when applying the minimum specified loads in Table 6.

5.7 Outdoor Thermal Cycling Test

5.7.1 Test Apparatus

The outdoor thermal cycling test intended for gas applications shall be conducted as follows:

(a) Connect the fitting to an applicable pipe with a minimum length of 300 mm (12 in);
(b) Seal the test assembly and subject it to an air pressure of 690 ± 69 kPa (100 ± 10 psi);
(c) Connect a thermocouple to the fitting to monitor the fitting temperature;
(d) Mount the test assembly in an environmental chamber with an initial room temperature;
(e) Adjust the temperature to 10 ± 1°C (50 ± 2°F) and maintain it for 1 h once the thermocouple reaches that set temperature;
(f) Increase the temperature to 60 ± 1°C (140 ± 2°F) and maintain it for 1 h once the thermocouple reaches that set temperature;
(g) Reset to room temperature and wait for the thermocouple to indicate that temperature and repeat step (e);
(h) Reduce the temperature to -40 ± 1°C (-40 ± 2°F) and maintain it for 1 h once the thermocouple reaches that set temperature;
(i) Repeat steps (e) to (h) for 25 continuous cycles;
(j) Remove the sample from the environmental chamber and let it sit in atmospheric conditions for 10-15 min;
(k) Submerge the test specimen under water at room temperature; and

(l) Subject the specimen to a pressure of 690 ± 69 kPa (100 ± 10 psi) in increments of 69 kPa/min (10 psi/min).

5.7.2 Performance Requirements

The fitting shall show no sign of leakage or permanent deformation.

6 Markings and Accompanying Literature

6.1 Markings

Compression fittings complying with this Standard shall be marked with the:

(a) Manufacturer's name or trademark;
(b) Model Number; and
(c) Application (e.g, “Water Supply”, “Gas Supply”, “WOG”).

6.2 Visibility

Markings shall be legible and visible after installation.

6.3 Installation Instructions

Compression fittings covered by this Standard shall be accompanied by instructions for their installation, care and maintenance, and repair, specifying at least the following:

(a) Recommended tightening torque for all applicable sizes;
(b) Recommended working pressure range for water and gas distribution applications; and
(c) Applicable pipe materials that can be used with this fitting.

Table 1
Minimum Properties of Thermoplastic elastomer (TPE)
(See Sections 4.3.2, and 4.3.~~3~~5)

Properties	Value	ASTM Test
Hardness (Shore A)	≥~~60~~55	~~D790~~ISO 868
Tensile Stress at 100%	≥~~1.9 (280)~~1.7 MPa (246 psi)	D412
Tensile Strength at Break	≥~~6 MPa (870 psi)~~4.5 Mpa (652 psi)	D412
~~Tear Strength~~	~~≥20 kN/m (114 lbf/in)~~	~~D624~~
Elongation at Break	≥~~350%~~400%	D412
~~Brittleness Temperature~~	~~≤ -50 °C (-58 °F)~~	~~D746~~

~~**Table 2**~~
~~**Minimum Properties of High-density polyethylene (HDPE)**~~
~~(See Section 4.3.7)~~

~~Properties~~	~~Value SI (U.S.)~~	~~ASTM Test~~
~~Density~~	~~≥0.925 g/cm³ (0.033 lb/in³)~~	~~D1505~~
~~Tensile Stress at Yield~~	~~≥7.5 MPa (1088 psi)~~	~~D638~~
~~Tensile Strain at Break point~~	~~≥400 %~~	~~D638~~

Table 2
Minimum Properties of 66 Nylon(Polyamide 66)
(See Section 4.3.4)

Properties	Value SI (U.S.)	ASTM Test
Density	≥1.2 g/cm³ (0.043 lb/in³	D792
Tensile Stress at Break	≥115 MPa (16.68 Ksi)	D638
Flexural Modulus	≥5,000 MPa (725 Ksi)	D790
Izod Impact Strength	40 J/m (9 lbf)	D256

Table 3
Minimum Properties of Polyacetal (POM)
(See Section 4.3.~~8~~6)

Properties	Value SI (U.S.)	ASTM Test
Rockwell Hardness (M scale)	≥60	D785
Tensile Stress at Yield	≥80 MPa (11,603 psi)	D638
Heat Deflection Temperature 1.8 Mp (261 psi))	≥110℃ (230℉)	D648

Table 4
Forces for Mechanical Separation Test
(See Section 5.2.1)

Nominal Size DN (CTS)	Longitudinal Test Load	
mm (in)	lbf (±5.0)	N (±22)
15 (0.5)	120.0	533.8
20 (0.75)	215.0	956.3
25 (1)	375.0	1668.0
32 (1.25)	550.0	2446.0
40 (1.5)	785.0	3492.0

Table 5
Locations and Loads for Rigid Tubing Bend Test
(See Section 5.3.1)

Compression Fittings				
Nominal Size DN (CTS)	Static Load (+10%, -0%)		Test Length	
mm (in)	lbf	N	ft	m
15 (0.5)	1.5	6.7	3.0	0.91
20 (0.75)	2.5	11.1	3.0	0.91
25 (1)	5.0	22.2	3.0	0.91
32 (1.25)	10.0	44.5	3.0	0.91
40 (1.5)	12.5	55.6	5.0	1.50

Table 6
Minimum Tensile Load Criterion by Size
(See Sections 5.6.1, and 5.6.2)

Nominal Size (Galvanized pipe) DN (NPS)	Longitudinal Test Load	
mm (in)	lbf	N
10 (0.375)	495	2,202
15 (0.5)	854	3,799
20 (0.75)	1,102	4,901
25 (1)	1,574	7,001
32 (1.25)	1,978	8,799

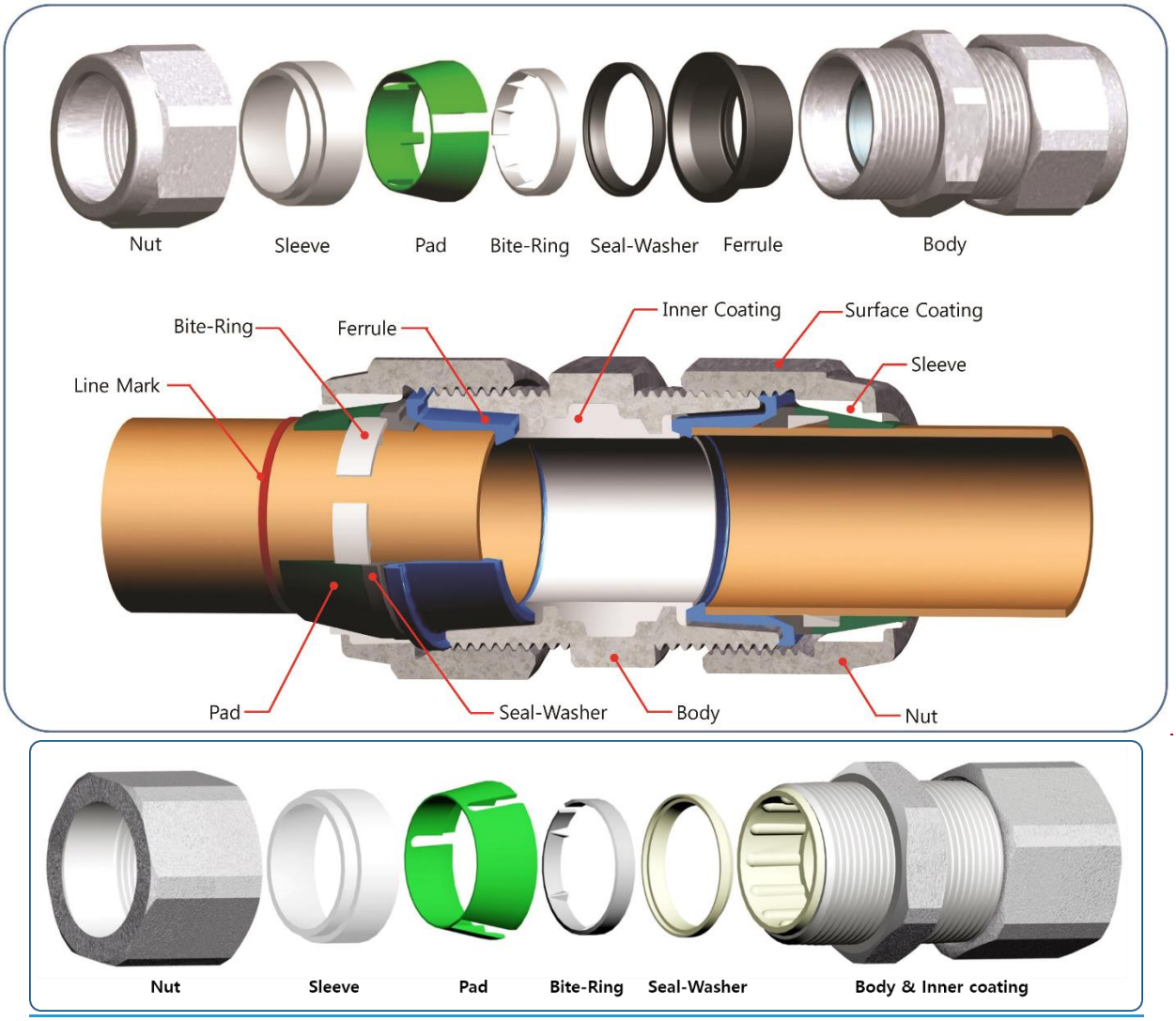

Figure 1
Compression Fitting Example
(See Section 4.1)

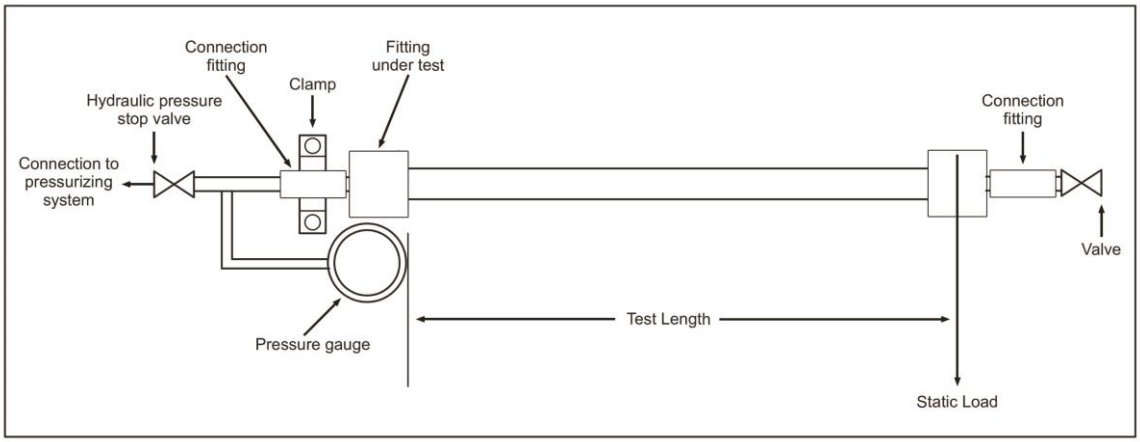

Figure 2
Bending Test Apparatus for Rigid Tubing
(See Section 5.3.1)

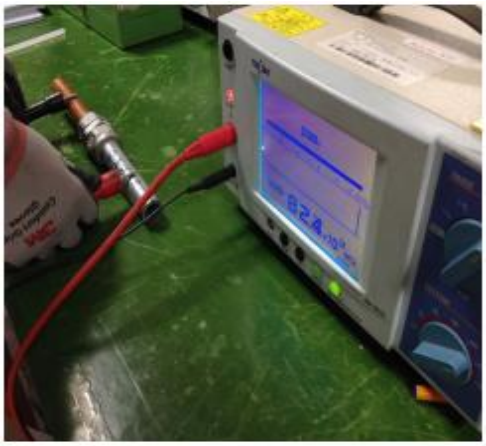

Figure 3
Electrical Resistance Measurement Test Between the Galvanized Pipe and Copper Pipe
(See Section 5.5.1)

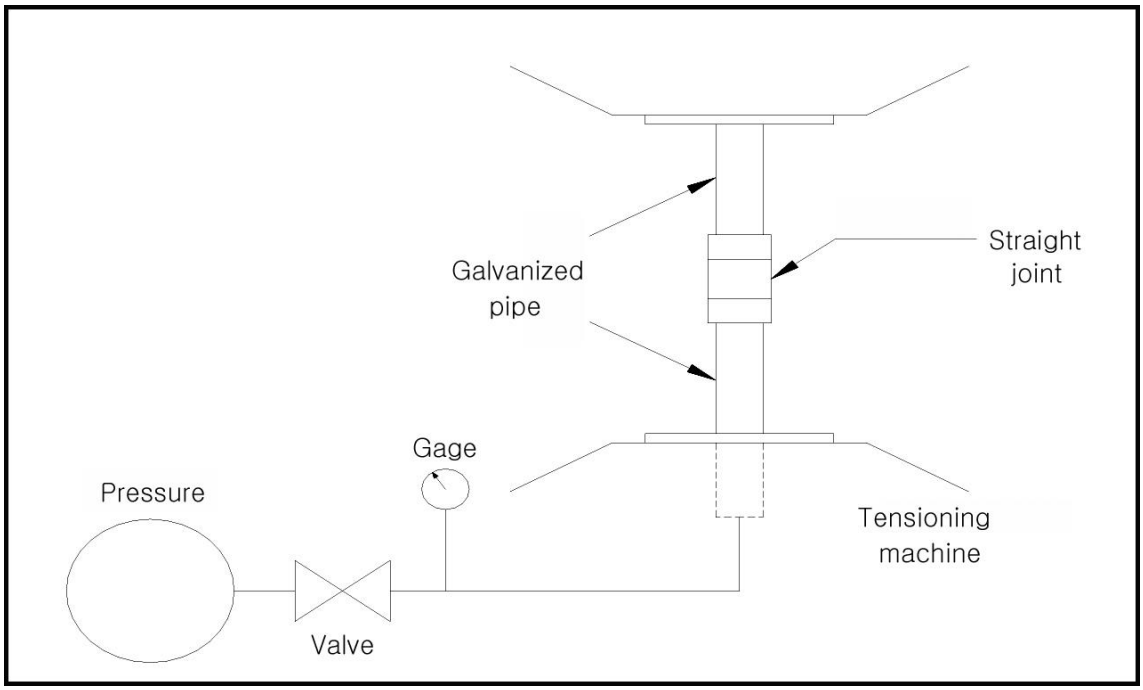

Figure 4
Pulling Test
(See Section 5.6.1)

International Association of Plumbing and Mechanical Officials (IAPMO)

4755 East Philadelphia Street | Ontario, California, 91761

1-800-854-2766 | 1-909-472-4100 | www.IAPMOstandards.org